CAD Requirements and Solutions for 3D-printed Electronics

Jasper Güldenstein

Universität Hamburg

06.07.2016

1 Motivation

2 PCB-Design

3 Physical Design

4 Combination of PCB- and Physical Design

5 Requirements for CAD-Tool

6 Current Development

7 Sources

Motivation

- current options
  - write GCode by hand
  - use specialized software
  - see Current Development
- need for software to make 3d-printed electronics viable

Electrical Requirements

- specify requirements for the circuit
- find components that fulfill requirements
- inform about components using datasheets

Schematic

- specify components/find components specification in library
- place components in schematic
- verify circuit using knowledge and/or simulation

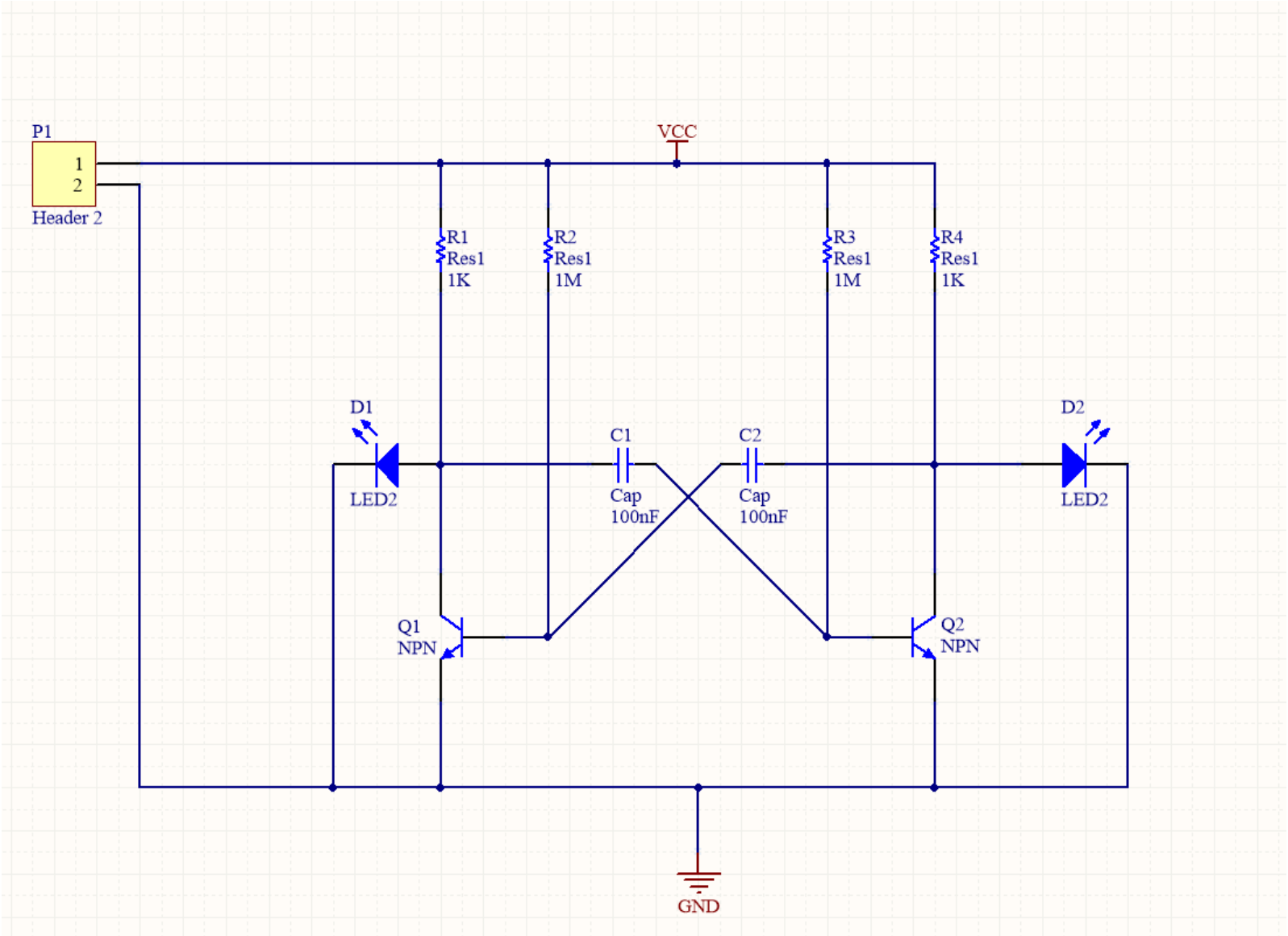
P1
1
2
Header 2
VCC
R1
Res1
1K
R2
Res1
1M
R3
Res1
1M
R4
Res1
1K
D1
LED2
C1
Cap
100nF
C2
Cap
100nF
D2
LED2
Q1
NPN
Q2
NPN
GND

Component Placement

- specify physical component dimensions
- place components on PCB
- verify spatial requirements

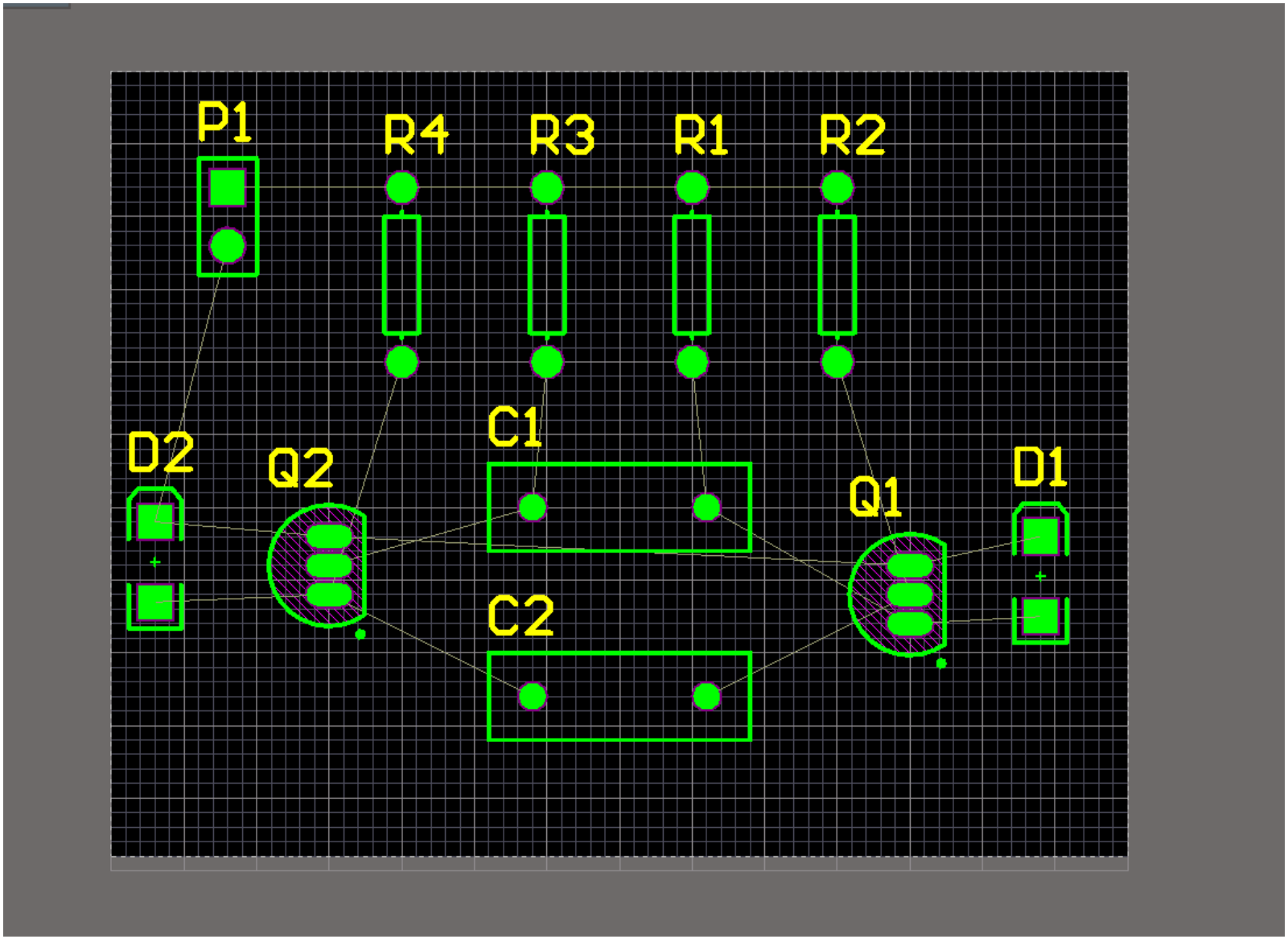
P1
R4
R3
R1
R2
C1
D2
Q2
Q1
D1
C2

Routing

- specify trace width
- route traces specified by schematic
- move components if necessary

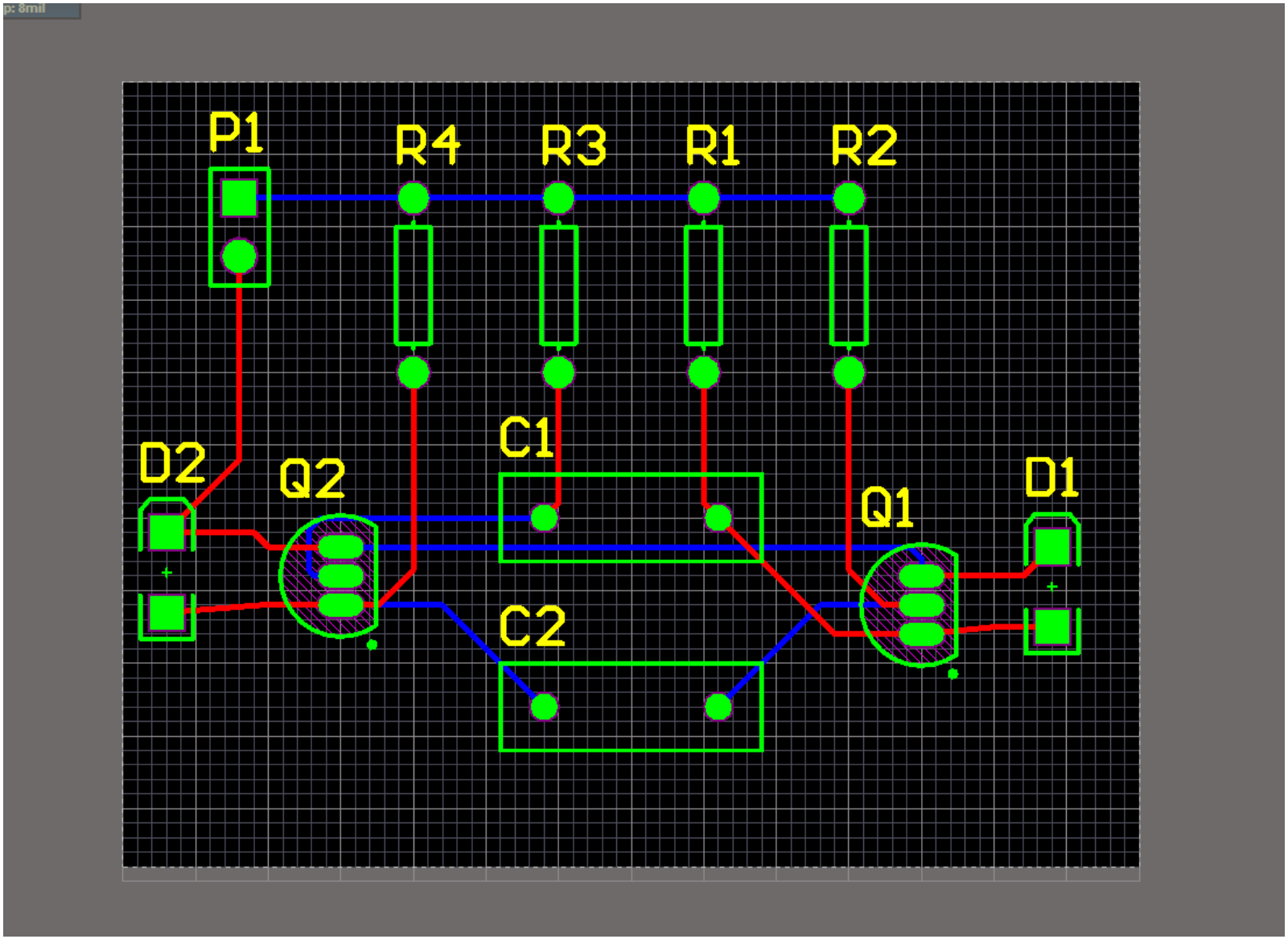
P1
R4
R3
R1
R2
D2
Q2
C1
Q1
D1
C2

Spacial Requirements

- specify physical dimensions

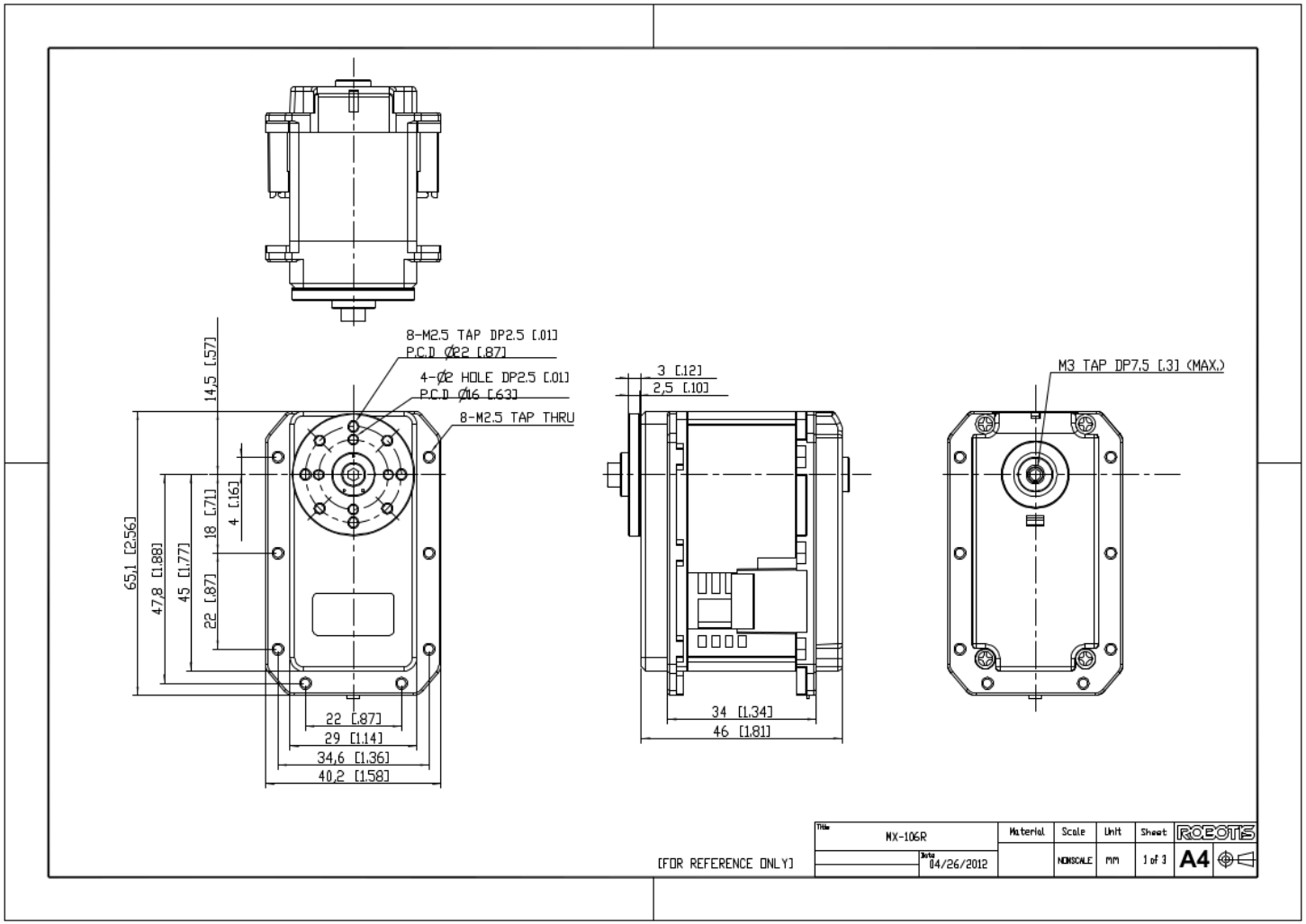

Figure: MX-106R Servomotor by Dynamixel

3D-Modelling

- draw sketch
- extrude 2D sketch to 3D component
- create 2D sketch on 3D models surface or on work plane
- cut or extrude from original model

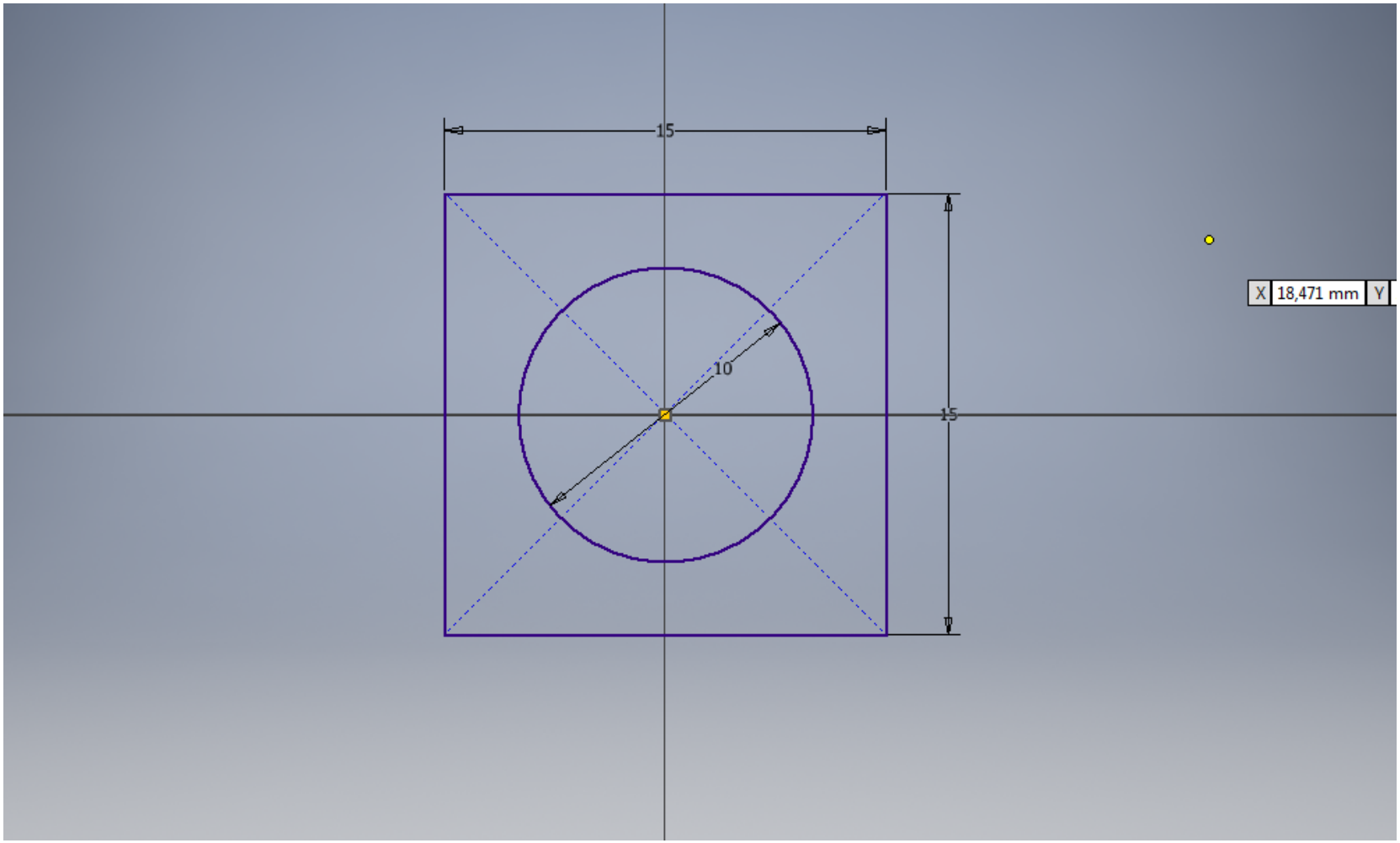
15
10
15
X 18,471 mm Y

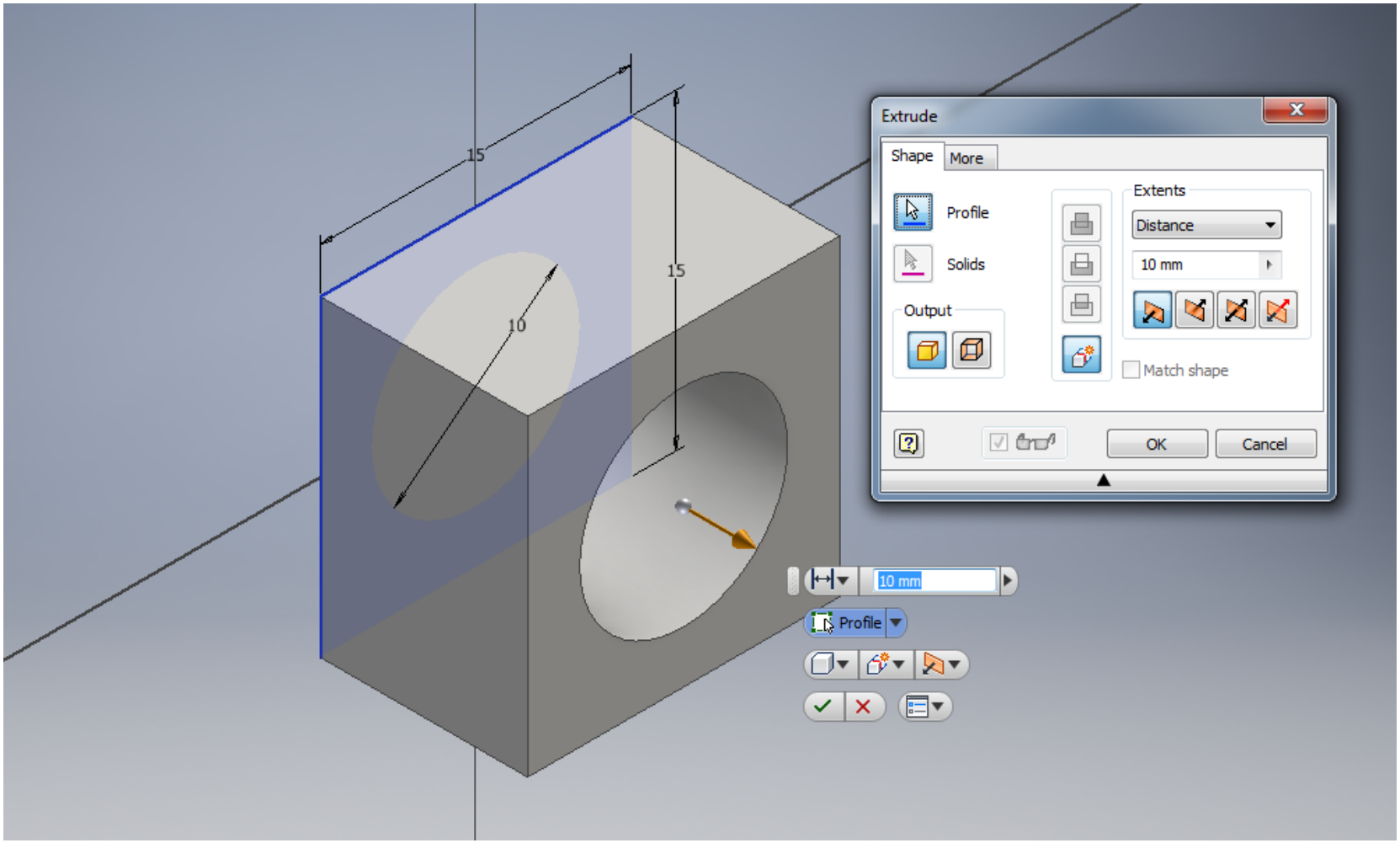
15
15
10
Extrude
Shape
More
Profile
Solids
Output
Extents
Distance
10 mm
Match shape
OK
Cancel
10 mm
Profile

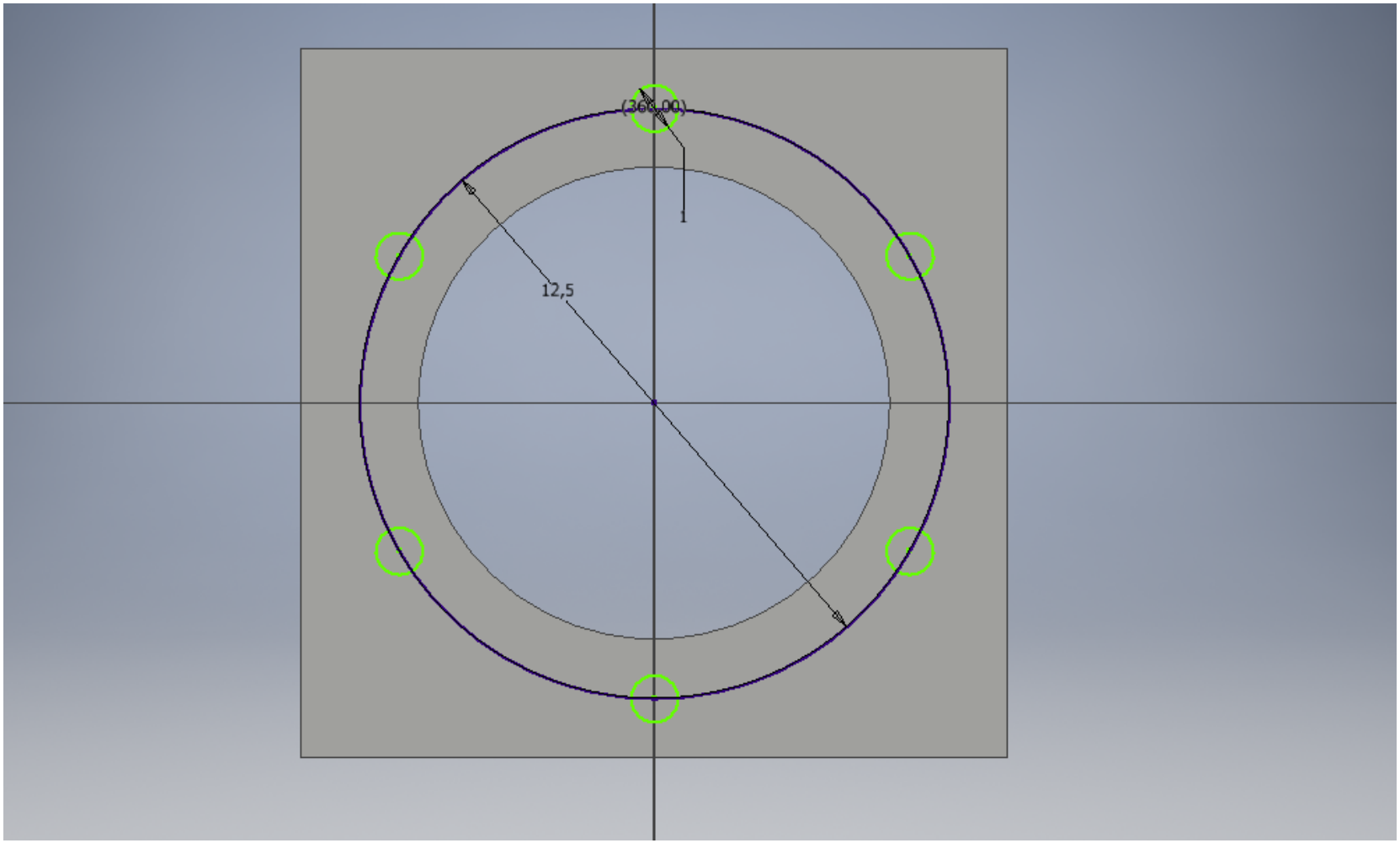
(368,00)
1
12,5

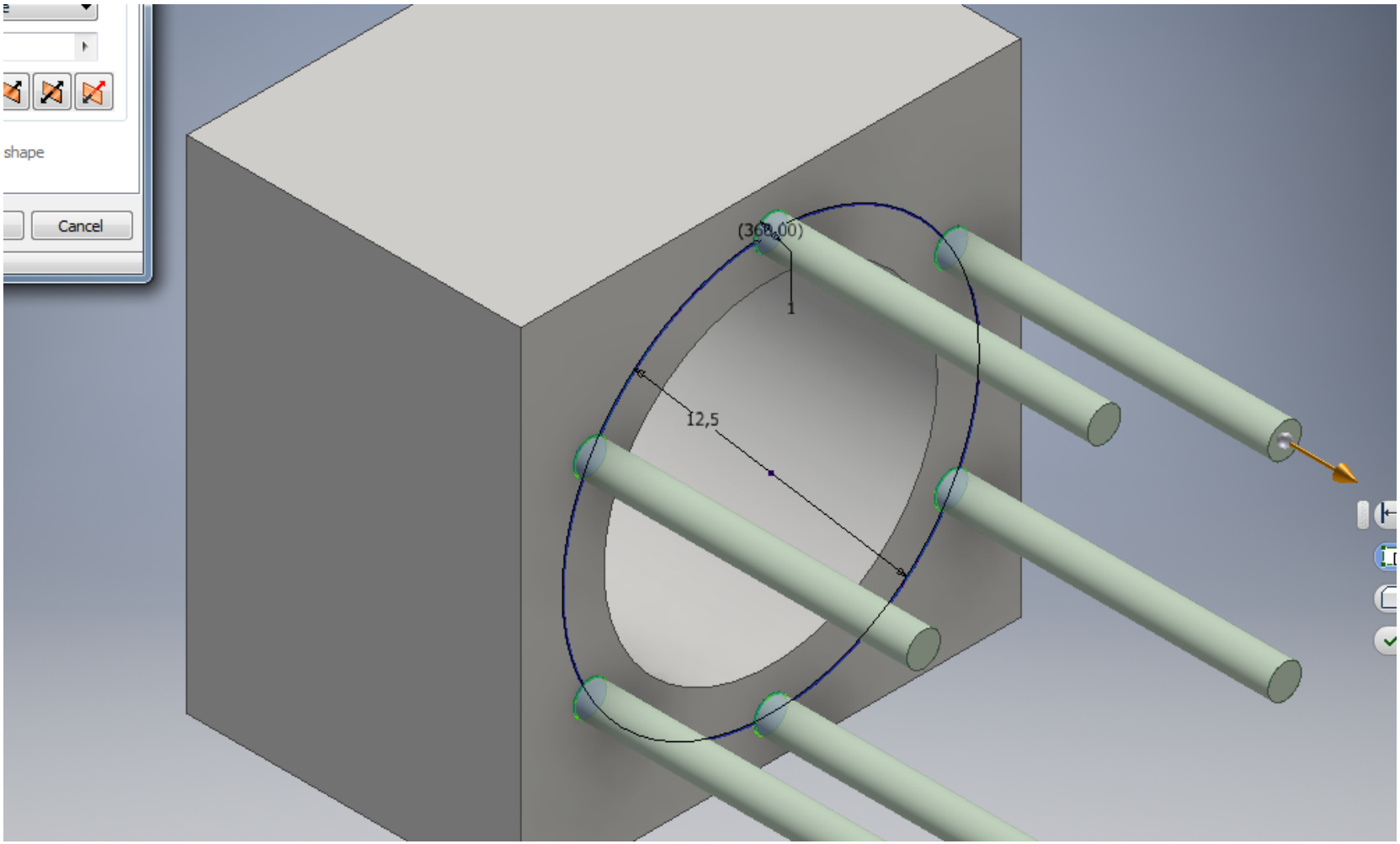
shape
Cancel
(360,00)
1
12,5

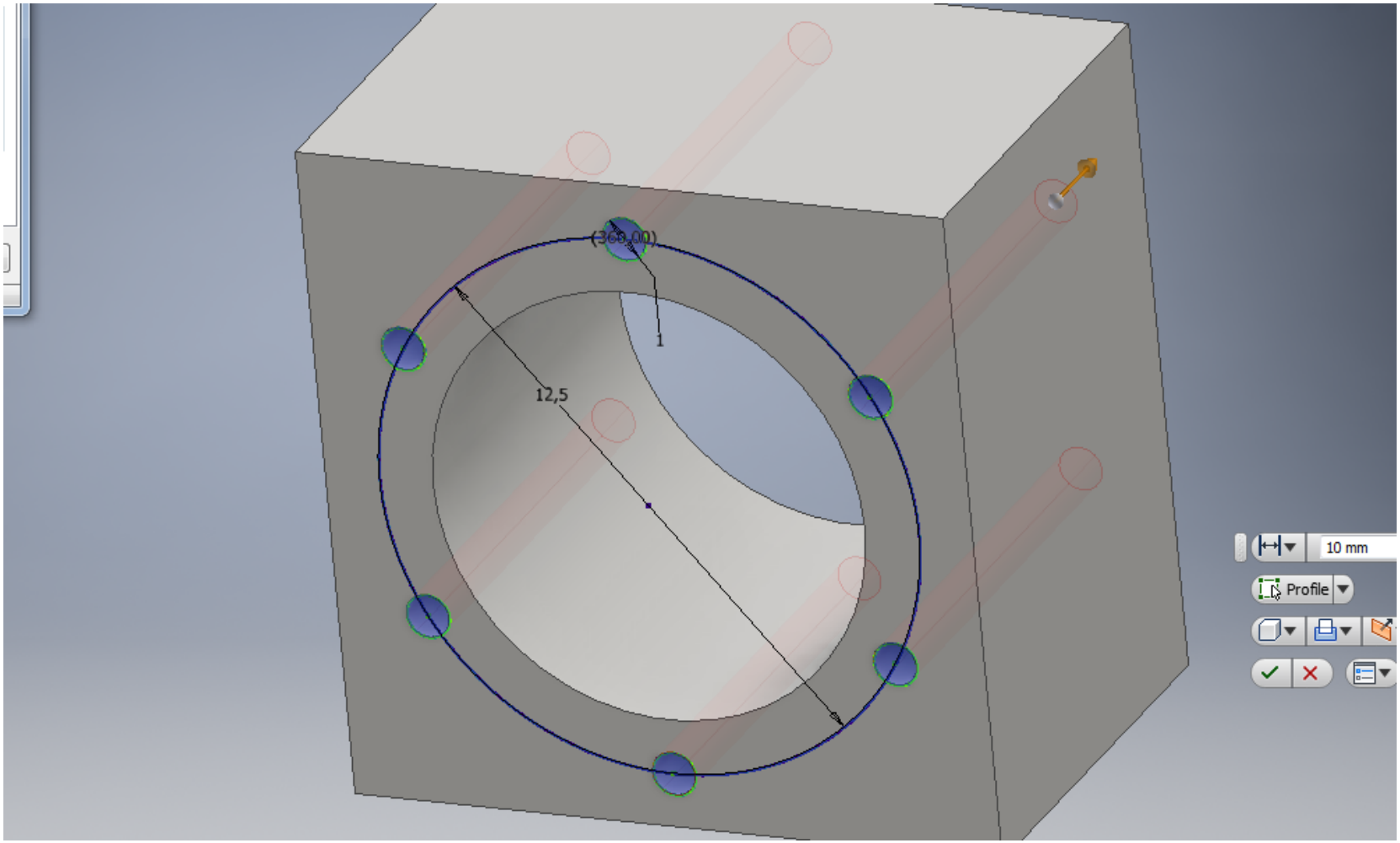
(368,00)
1
12,5
10 mm
Profile

Print Preparation

- export model to slicing tool (Slic3r)
- set slicing parameter

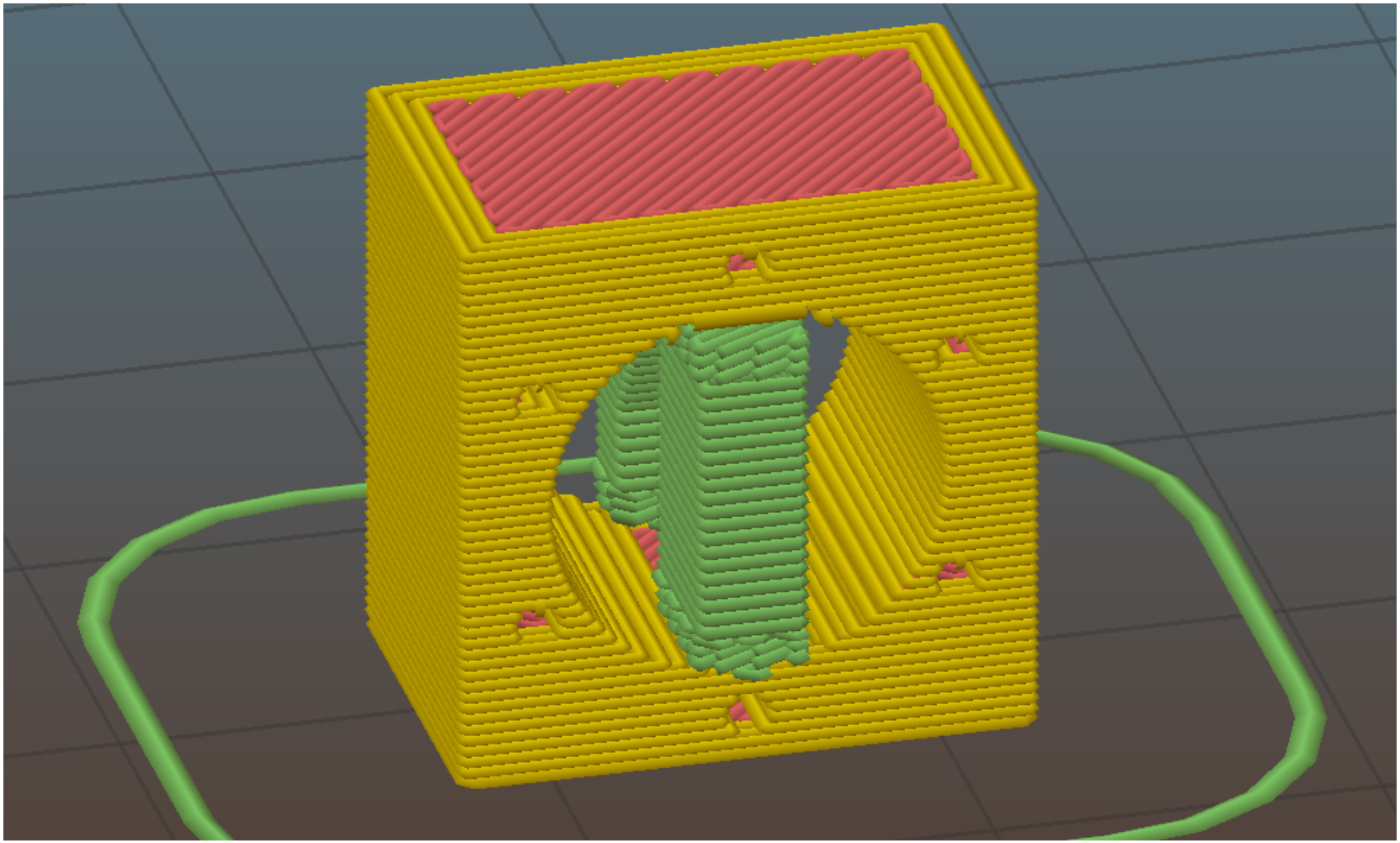

Distinct Processes

- determining electrical and physical requirements
- schematic drawing creation

Combined Processes

- 3D-modelling
- component placement
- routing (2.5D $\rightarrow$ 3D)

Print Preparation

- ink nozzle can be controlled like regular nozzle
  - different extrusion characteristics
- component placement requires different approach

Existing and Required Software

- existing software
  - schematic drawing
  - 3D modelling
    - placing
- reqired software
  - routing tool
  - print preparation tool

Challenges with separate Software

- importing file formats
- extension of file format needed for components/3D modelling tool needs to support existing component file format
- changing position of components after beginning to route

Requirements for Routing and Placement Tool

- import model and schematic
- placement of components
  - component library
- assist user in 3D routing
  - displaying „rat's nest“ from schematic
  - snap traces to components pins
  - provide work planes
  - 3D routing algorithm (computationally hard)

Requirements for Print-Preparation-Tool

- import and analyze files from routing and placement tool
- provide new algorithms and settings for technology used for traces
- currently no standards for 3D electronics printers

Current Development

- PCB-Folding
- Autodesk Project Wire Beta
- Voxel8 Dashboard
- Slic3r modification

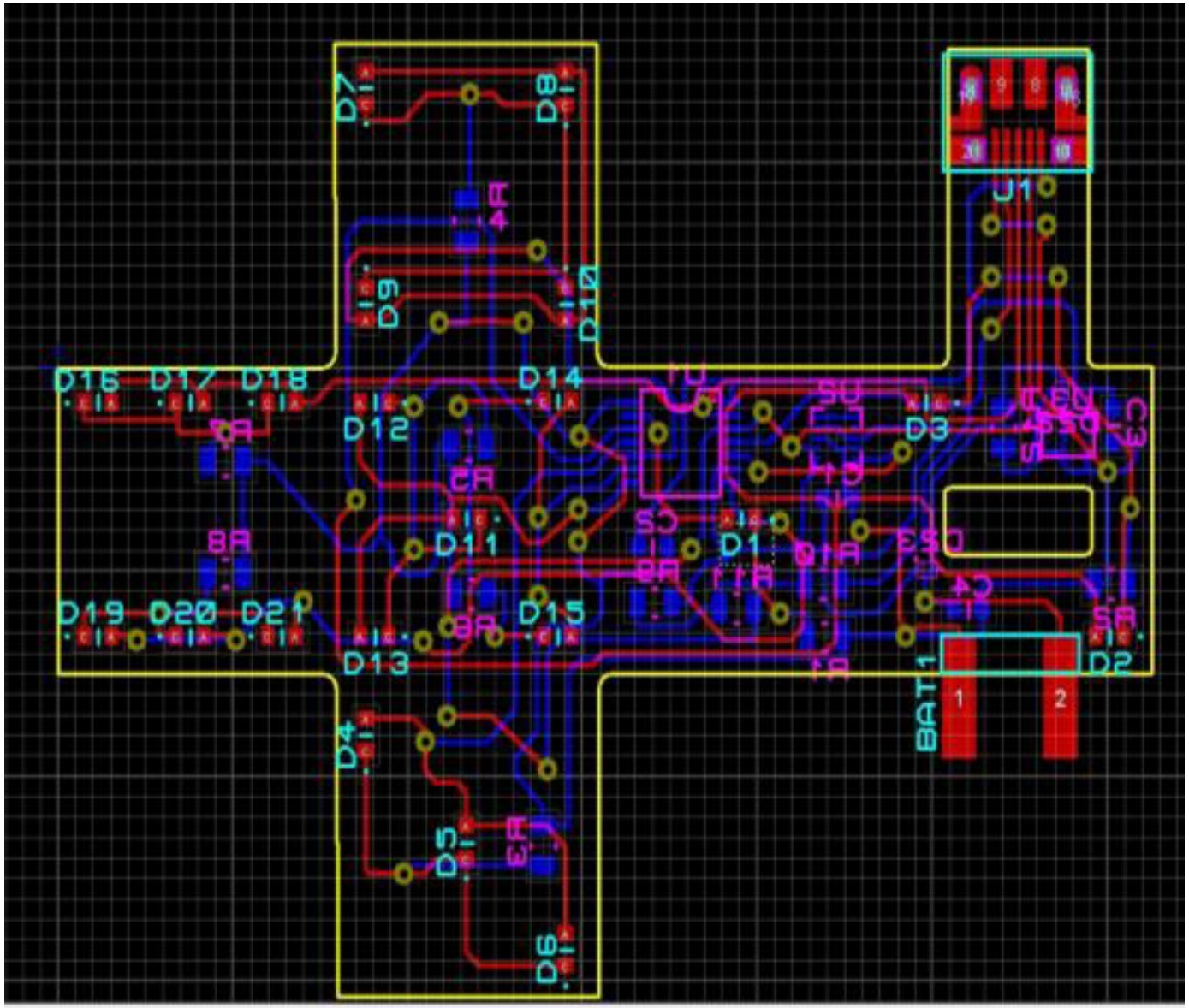
D7
D8
D9
D10
D16
D17
D18
D14
D12
D3
D11
D1
D19
D20
D21
D15
D13
D2
D4
D5
D6
U1
BAT1
1
2

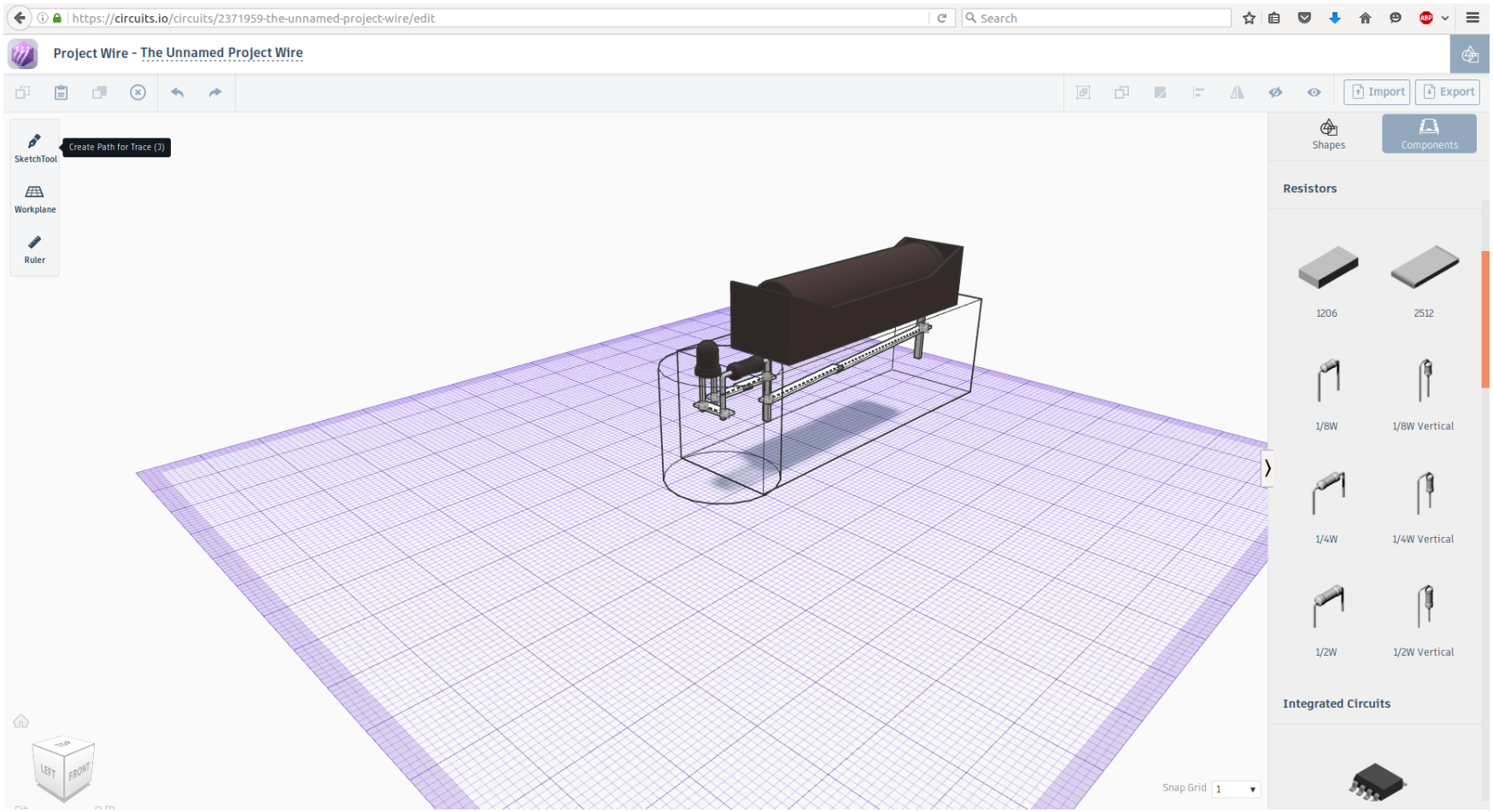
https://circuits.io/circuits/2371959-the-unnamed-project-wire/edit
Search
Project Wire - The Unnamed Project Wire
Import
Export
SketchTool
Create Path for Trace (J)
Workplane
Ruler
Shapes
Components
Resistors
1206
2512
1/8W
1/8W Vertical
1/4W
1/4W Vertical
1/2W
1/2W Vertical
Integrated Circuits
Snap Grid
1
LEFT
FRONT

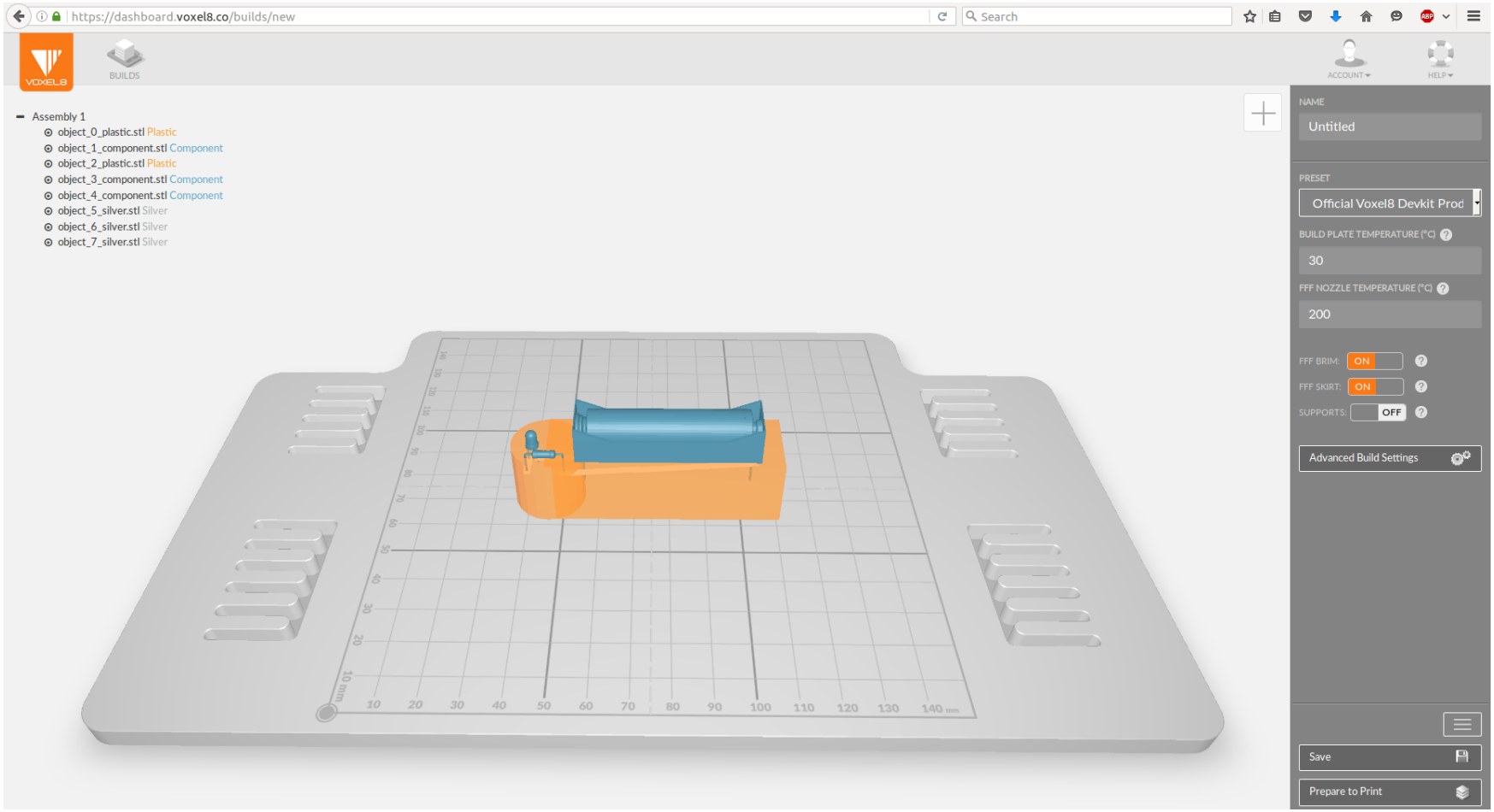
https://dashboard.voxel8.co/builds/new
Search
VOXEL8
BUILDS
ACCOUNT
HELP
Assembly 1
object_0_plastic.stl Plastic
object_1_component.stl Component
object_2_plastic.stl Plastic
object_3_component.stl Component
object_4_component.stl Component
object_5_silver.stl Silver
object_6_silver.stl Silver
object_7_silver.stl Silver
NAME
Untitled
PRESET
Official Voxel8 Devkit Prod
BUILD PLATE TEMPERATURE (°C)
30
FFF NOZZLE TEMPERATURE (°C)
200
FFF BRIM: ON
FFF SKIRT: ON
SUPPORTS: OFF
Advanced Build Settings
Save
Prepare to Print

Sources

- images
  - http://www.robotis.com/view/MX-106R/MX-106R.pdf
  - other images are screenshots of AutodeskInventor, Slic3r or mentioned websites
- scientific papers
  - J. P. Swensen, L. U. Odhner, B. Araki, A. M. Dollar *Injected 3D Electrical Traces in Additive Manufactured Parts with Low Melting Temperature Metals*, in *2015 IEEE International Conference on Robotics and Automation (ICRA)* pp.988-995
  - F. Wasserfall *Embedding of SMD populated circuits into FDM printed objects* Proceedings of the 26th International Solid Freeform Fabrication Symposium, Austin, Texas, 2015
  - Macdonald, Eric: 3D Printing for the Rapid Prototyping of Structural Electronics, IEEE Access, 2014
- websites
  - http://www.voxel8.co/printer/
  - https://circuits.io/ (Project Wire)